Energy Management Power Analyzers Type WM1-DIN

CARLO GAVAZZI

- **3-dgt multi-range µP-based meter**
- **Scrolling of power, energy, power factor (cos φ), current and voltage**
- **Automatic selection of k (kilo) or M (mega) scale**
- **Automatic measurement of peak value**
- **Double measuring input: Up to 5 A or up to 27 A**
- **Degree of protection (front): IP 40**
- **Options:**
  - **Programable alarm setpoint output**
  - **Pulse output for connection to remote display or PLC**
  - **Serial RS 485 output for connection to a personal computer**
  - **WATTSOFT1 energy management software for WM1-DIN network**

Product Description

3-dgt µP-based meter for measuring power, energy, power factor (cos φ), current and voltage with automatic selection of scale. A programmable alarm setpoint output is available on request. The housing is easy to mount on DIN-rail and offers a degree of protection (front) of IP 40.

Ordering Key

WM1-DIN27AAD0XX

- **Model**
- **Range code**
- **Measurement**
- **Power supply**
- **Setpoints**
- **Option**

Type Selection

Range code

27A: 5 AAC or 27 AAC selectable

[1] on request

Power Supply

C: 115 VAC, -15% +10%, 50/60 Hz [1]

D: 230 VAC, -15% +10%, 50/60 Hz (standard)

Set-points

0: no alarm

1: one alarm

Options

XX: None (1-phase/ 3-phase system with neutral, balanced load)

TX: Measurement on 3-phase system without neutral (balanced load)

PX: Pulse output (available only without alarm)

RX: RS 485 serial interface (1-phase/3-phase system, with neutral and balanced load)

SX: RS 485 serial interface (3-phase system, without neutral and with balanced load)

Input Specifications

Accuracy (@ 25°C ± 5°C, R.H. ≤ 60%)	± 2 % f.s., ± 2 dgt
Temperature drift	± 250 ppm/°C,
Display	7-segment LED, h 14.2 mm, 3 digits
Decimal point position	Automatic selection and indication of "k" or "M" range.
Max. and min. indication	Max.: 999, Min.: 0
Overflow indication	"oF"
Input	
Current	27 AAC permanent, direct conn. max. 32 AAC for 2 minutes. 5 AAC permanent, CT conn. max. 6 AAC for 2 minutes
Voltage (48 to 62 Hz)	400 VAC (1-phase conn.) 500 VAC (3-phase conn.)

Input (cont.)	
Type	1-phase/3-phase with neutral, balanced load (standard) 3-phase without neutral, balanced load (on request)
Wave form	Undistorted sine wave (form factor 1.11)
Impedance	
Voltmeter input:	≥ 1 MΩ
Ammeter input:	1 mΩ (27 A) 6 mΩ (5 A)
Key-pad enable input	By means of external, voltage free NC contact. The input is not insulated from the measuring inputs. Can be used to avoid unwanted programming modifications, resets and totalized energy.

CARLO GAVAZZI

Input Specifications (cont.)

Measurements	
Voltage, current, instantaneous power	V_{L-N}, or V_{L-L}, I, W, VA, VAR (max. display: 999M-)
Peak value	Accessible by means of the key-pad in run mode.
Energy	Wh, VAh VARh (max. display: 999 M-)
Power factor - cos φ	Accuracy: ± 4 dgt @ 25°C, voltage ≥ 3% f.s. current ≥ 10% f.s. Display: L.10/1.00/C.10; In case of voltage and/or current lower than 3% f.s., the display flashes "1.00"
Reset date updating	Month and day of the last reset manually programmed by key-pad
Primary range	Transformer ratio programmable from 1 to 999 (max. 5000/5A).

General Specifications

Operating temperature	0° to 50°C (32° to 122°F) (R.H. < 90% non-condensing)
Storage temperature	-10° to 60°C (14° to 140°F) (R.H. < 90% non-condensing)
Insulation reference voltage	300 V_{rms} to ground
Dielectric strength	4000 V_{rms} for 1 minute
EMC	EN 50081-1, EN 50082-1
Safety standards	EN 61010-1, IEC 61010-1, VDE 0411
Connector	Screw-type
Housing	
Dimensions	89 x 71.5 x 58.5 mm (4 DIN-modules)
Material	ABS, self-extinguishing: UL 94 V-0
Degree of protection	IP 40 (front)
Weight	Approx 320 g
Approvals	CE

Output Specifications

Alarms (on request)	
Number of setpoints	0 standard (1 on request).
Setpoint adjustment	From 0 to 999 MW/MVA/MVAR/instantaneous power, MWh/MVAh/MVARh energy and from L/C. 10 to 1.00 cos φ key-pad programmable
Accuracy	± 2%
Hysteresis	0 to 100% f.s. key-pad programable
Time delay adjustment	0 to 255 s key-pad programable
Alarm type	Low or high key-pad programable
Output type	Static by TRIAC. (24 VAC to 250 VAC/max. 50 mA).
Insulation	2 kV between alarm output and all inputs and serial out - put (if available)
Pulse output (on request)	
Type	
Insulated, open collector:	V_{ON} = 0.6 VDC/max. 4 mA V_{OFF} max. 20 VDC
Pulse:	ON status 200 ms OFF status 800 ms min.- NPN output
Pulse number	From 1 to 199 pulses for kWh, kVAh or kVARh
Insulation	2 kV between output and all inputs and serial output if available

Serial output (on request)	
Type	One-way multidrop RS 485 (double direction: only for standard static TRIAC output)
Addresses	256 adresses key-pad selectable.
Data	W, VA, VAR, Wh, VAh, VARh, V, I, cos φ and setpoint status where present
Data format	1 start bit - 7 data bit - even parity - 1 stop bit. 1 start bit - 7 data bit - odd parity - 1 stop bit. 1 start bit - 8 data bit - no parity - 1 stop bit
Baud-rate	1200, 2400, 4800 and 9600 bauds, key-pad selectable
Connections	2 wires (max. length: 1200 m) + shield. Bias and/or line termination (selectable by DIP-switch).
Software (on request)	WATTSOFT1: managing software of the WM1-DIN network (Std: up to 32 instruments, from 33 to 256 instruments using the SIU-DIN.8585 modules).
Power supply	Separate 5 VDC, power consumption 70 mA (PSU-DIN module).
Insulation	By means of optocouplers, 2 kV between serial output and measuring inputs. 2 kV between 5 VDC power supply input and measuring inputs.

CARLO GAVAZZI

Supply Specifications

AC supply	230 VAC, -15%+10%, 50/60 Hz (standard), 115 VAC, -15%+10%, 50/60 Hz (on request)
Insulation	4 kV between measuring inputs and power supply input 4 kV between enable input and power supply input
Power consumption	2.5 VA

Dimensions (mm)

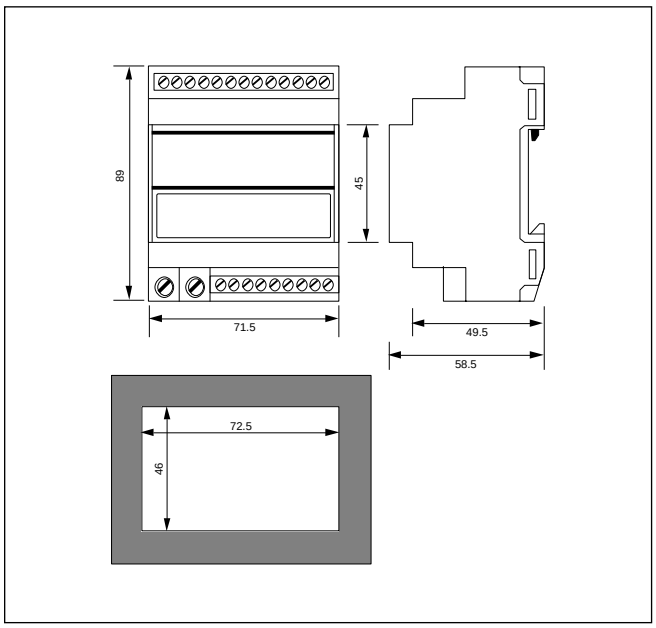

Front Panel Description

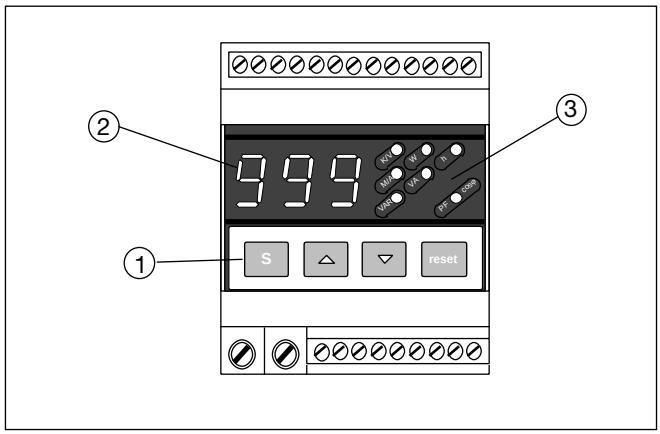

1. Key-pad

« S »	Set/enter
« ▲ »	Up
« ▼ »	Down
« Reset »	Special function

Set-up and programming procedures are easily controlled by the 4 pushbuttons.

1. Key-pad (cont.)

"S"
- To enter programming.

"UP/DOWN" (into the programming procedure)
- To select: priority measurement, serial interface parameters or pulse output parameters (on request), maximum power, energy or cos φ (on request).

"UP/DOWN" (during measurement)
- Scrolling all the available measurements

"Reset"
- Reset the displayed value (totalized energy or peak value).

2. Display

3-digit (maximum read-out 999).

Alphanumeric indication by means of 7-segment display for:
- Displaying of the measured value.
- Indication of programming parameters.

3. LED

To display the selected engineering unit (flashing LED to notify an alarm activation).

CARLO GAVAZZI

Wiring Diagrams

Direct connection on single phase or three-phase system with neutral and balanced load

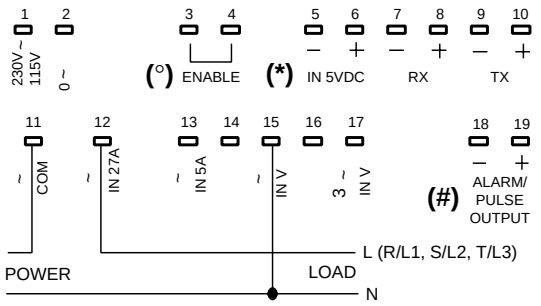

CT connection on single phase or three-phase system with neutral and balanced load

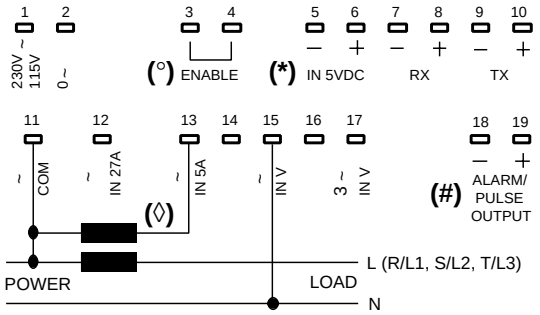

Direct connection on three-phase system without neutral and with balanced load

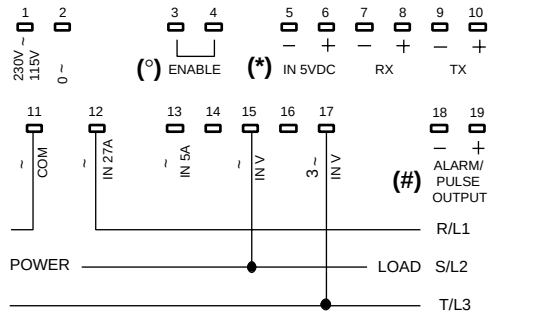

CT connection on three-phase system without neutral and with balanced load

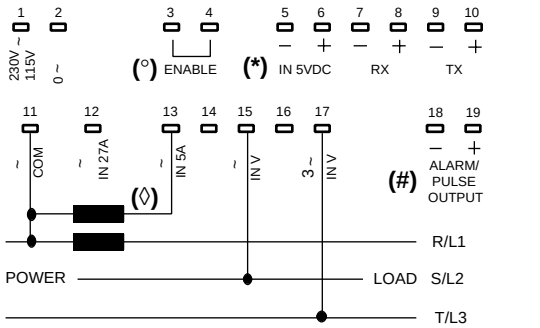

(*) An external 5 VDC power supply must be connected to the RS485 serial interface output (see PSU-DIN module)
(◊) Attention: CT's cannot be earthed
(•) Attention: The ENABLE input (KEY-PAD enabling) is not insulated from the measuring inputs
(#) The static ALARM OUTPUT must be connected in series to the load to be controlled, as if it were a simple contact

Network Connection

PC/WM1-DIN network connections (RS485 interface)