KUN HUNG ELECTRIC CO,.LTD. established in October 15, 1969, is a manufacturer of industrial control components used for industrial automation and pursued the best quality on basis of eudless research and development and accumulated technologies. In order to ensure the product quality, we are setting up quality system to meet international appliacation codes and standards such as ISO 9001, UL, CE, etc.

Creative Passion

Koino®

www.koino.com

KUN HUNG ELECTRIC CO.,LTD.
113 - 4, Jangan - dong, Dongdaemoon - gu, Seoul 130 - 104, Korea

Creative Passion

Koino®

www.koino.com

# KL Series Limit Switch

KUN HUNG ELECTRIC CO.,LTD.
113 - 4, Jangan - dong, Dongdaemoon - gu, Seoul 130 - 104, Korea

Tel : 82-2-2247-3131
Fax : 82-2-2244-2011
E-mail : koino@koino.co.kr
trade@koino.co.kr

# KL Series Limit Switch

## Features

Housing is made of durable aluminum die-casting.
Heat-resistance, oil-resistance, vibration - resistance structure (protection IP67)
Built-in double-pole double-break standard micro-switches
Operation Indicator (LED or Neon lamp) helps easier inspection and maintenance
Microload models are available

| | | | | | |
|---|---|---|---|---|---|
| Actuator | Roller lever | | 75° | 90° | • Roller lever, adjustable roller lever, adjustable rod lever, fork lever lock |
| | Plunger | | ○ | | • Top plunger, top roller plunger, sealed top roller plunger, top ball plunger, side roller plunger |
| | Flexible rod | | ○ | | • Coil spring, coil spring aluminum rod |
| Load | Standard load | 1a1b | ○ | | • Using of normal double pole, double break switch |
| | Microload | 1a1b | | | |
| Environment -resistance specification | Hermetic | | ○ | | • Using of hermetic sealed built-in switch |
| | Mold terminal | | | | • Lead wire attached<br>• Improved hermetic property with epoxy resin in receptacle part |
| | Heat-resistance | KL□□-TH | | | • Silicon rubber is used to improve heat-resistance<br>• Ambient temperature120℃<br>• Available operation temperature (+5℃~+120℃) |
| | Cold-resistance | KL□□-TC | | | • Silicon rubber is used to improve cold-resistance<br>• Ambient temperature −40℃<br>• Available operation temperature (−40℃~+40℃) |
| Operation indicating lamp | | KL□□-LE | ○ | | • Operation state can be monitored easily.<br>• Turn on lamp when operating, available to turn on lamp when not-in-operating |
| | | KL□□-LD | ○ | | |



KL Series Limit Switch

Koino | KUN HUNG ELECTRIC CO.,LTD.

## Nomenclature

KL□ □ - □ □ □ □ □ □
① ② ③ ④ ⑤ ⑥ ⑦ ⑧

### 1. Electric rating

| | |
|---|---|
| – | Standard load |
| 01 | Microload |

### 2. Actuator

| Code | Actuator |
|---|---|
| CA2 | Roller lever (75° actuation) |
| CA2-2 | Roller lever (90° actuation) |
| CA12 | Adjustable roller lever (75° actuation) |
| CA12-2 | Adjustable roller lever (90° actuation) |
| CL | Adjustable rod lever (75° actuation) |
| CL-2 | Adjustable rod lever (90° actuation) |
| CA32-41 | Fork lever lock |
| CA32-42 | Fork lever lock |
| CA32-43 | Fork lever lock |
| CA32-44 | Fork lever lock |
| D | Top plunger |
| D2 | Top roller plunger |
| D28 | Sealed top roller plunger |
| D3 | Top ball plunger |
| SD2 | Side roller plunger |
| NJ | Coil spring |
| NJ-A2 | Coil spring aluminum rod |

### 3. Environment-resistance specification

| | |
|---|---|
| – | Standard |
| T | Corrosion-resistance |
| B | Hermetic |

### 4. Identification of operation

| Code | Element |
|---|---|
| – | Standard |
| LE | Neon lamp |
| LD | LED |

### 5. Lamp Wiring

| | |
|---|---|
| 2 | Connecting with NC: Light ON when operating |
| 3 | Connecting with NO: Light ON when not operating |

### 6. Temperature Specification

| | |
|---|---|
| – | Standard −10℃ ~ +80℃ |
| TH | Heat-resistance +5℃ ~ +120℃ |
| TC | Cold-resistance −40℃ ~ +40℃ |

※ Product for heat or cold resistance can be applied to roller lever type, adjustable roller lever type and adjustable rod lever type product.

### 7. Lever order specification

| | |
|---|---|
| – | Standard |
| SA | Forged lever (Aluminum) |
| SS | STS lever |
| S50 | S lever (Roller O.D. Ø50) |
| SA50 | Forged lever (Roller O.D. Ø50) |

### 8. Connector order specification

| | |
|---|---|
| SC-D6SW | Seal connector (DC) |
| SC-A6SW | Seal connector (AC) |

# KL Series Limit Switch

## Rotary lever

| Actuator | | Roller Lever | | | Adjustable roller lever | | | Adjustable rod lever | | |
|---|---|---|---|---|---|---|---|---|---|---|
| | | 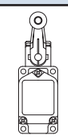 | | | 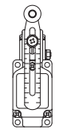 | | | 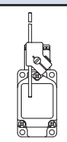 | | |
| movement of actuator | Features | Model name | Certification UL | Certification CE | Model name | Certification UL | Certification CE | Model name | Certification UL | Certification CE |
| 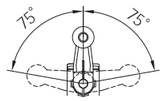 | • Incapable of one-side operation<br>• head mounts in any of 4 directions | KLCA2 | ○ | ○ | KLCA12 | ○ | ○ | KLCL | ○ | ○ |
| 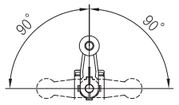 | | KLCA2-2 | ○ | ○ | KLCA12-2 | ○ | ○ | KLCL-2 | ○ | ○ |

## Folk lever Lock

| Actuator | | Roller Lever | | |
|---|---|---|---|---|
| | | 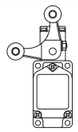 | | |
| movement of actuator | Features | Model name | Certification UL | Certification CE |
| 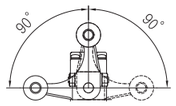 | • Incapable of one-side operation<br>• head mounts in any of 4 directions | KLCA32-41 | ○ | ○ |
| | | KLCA32-42 | | |
| | | KLCA32-43 | | |
| | | KLCA32-44 | | |

## Plunger

| Actuator | | Model Name | Certification UL | Certification CE |
|---|---|---|---|---|
| Top Plunger | 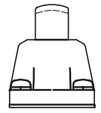 | KLD | ○ | ○ |
| Top roller plunger | 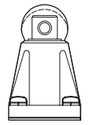 | KLD2 | ○ | ○ |
| Sealed top roller plunger | 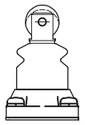 | KLD28 | ○ | ○ |
| Top ball plunger | 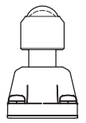 | KLD3 | ○ | ○ |
| Side roller plunger | 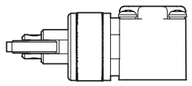 | KLSD2 | ○ | ○ |

## Flexible rod

| Actuator | | | Model Name | Certification UL | Certification CE |
|---|---|---|---|---|---|
| Coil spring | | Spring diameter Ø6.5 | KLNJ | ○ | ○ |
| Coil spring Aluminum rod | | Rod diameter Ø5 | KLNJ-A2 | ○ | ○ |

# KL Series Limit Switch

## Ratings

1. Normal open circuit

| Rated Voltage | Non-inductive load | | | | Inductive load | | | |
|---|---|---|---|---|---|---|---|---|
| | Resistance load | | Lamp load | | Resistance load | | Motor load | |
| | NC | NO | NC | NC | NC | NO | NC | NO |
| AC 125 | 10 | 10 | 3 | 1.5 | 6 | | 5 | 2.5 |
| AC 250 | 10 | 10 | 2 | 1 | 6 | | 3 | 1.5 |
| AC 480 | 6 | 6 | 1.5 | 0.8 | 3 | | 1.5 | 0.8 |
| AC 600 | 3 | 1 | 1 | 0.5 | 1.5 | | 1 | 0.5 |
| DC 8 | 10 | | 6 | 3 | 6 | | 6 | |
| DC 14 | 10 | | 6 | 3 | 6 | | 6 | |
| DC 30 | 6 | | 4 | 3 | 6 | | 6 | |
| DC 125 | 0.8 | | 0.2 | 0.2 | 0.8 | | 0.2 | |
| DC 250 | 0.4 | | 0.1 | 0.1 | 0.4 | | 0.1 | |

## Property data

Electrical durability (cosØ=1)

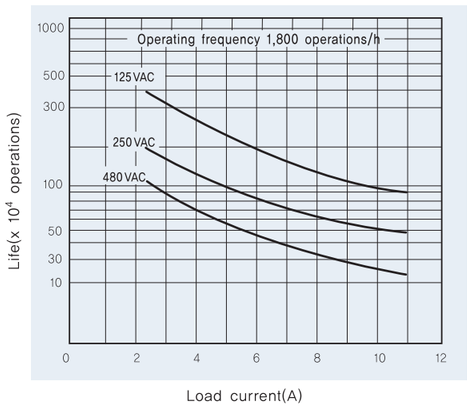


Microload models

| Rated Voltage (V) | Resistance load (A) |
|---|---|
| AC125 | 0.1 |
| DC30 | |

※ Operational load range: DC5~30V, 0.5~100mA



KL Series Limit Switch

## Characteristics

| Items | | | Actuator | Roller lever | Adjustable roller lever | Adjustable rod lever | Fork lever lock | Plunger | Flexible Rod |
|---|---|---|---|---|---|---|---|---|---|
| | | | Model number | KLCA2 | KLCA12 | KLCL | KLCA32-41 | KLD | KLNJ |
| | | | | KLCA2-2 | KLCA12-2 | KLCL-2 | KLCA32-42 | KLD2 | KLNJ-A2 |
| | | | | | | | KLCA32-43 | KLD28 | |
| | | | | | | | KLCA32-44 | KLD3 | |
| | | | | | | | | KLSD2 | |
| External specification | Standard specification | | IEC | | | | | | |
| | Certified specification | | CE, certified for electric product safety | | | | | | |
| Structure | Contact point type | | Dual terminal 2 circuit switch | | | | | | |
| | Load | Standard load | Silver alloy | | | | | | |
| | | Microload | Silver (gold plating) | | | | | | |
| | Protection structure | | IP67(IEC60529), KLD2(IP47) | | | | | | |
| Electrical properties | Withstand voltage | | Between live parts: AC1,000V 60/60Hz for 1minute<br>Between dead parts: AC2,000V 50/60Hz for 1 minute | | | | | | |
| | Isolation resistance | | Isolation resistance 100MΩ or more(DC500V isolation resistance gauge) | | | | | | |
| | Contact resistance (initial value) | Standard load | 25mΩ or below | | | | | | |
| Allowed operating velocity | | | 1 mm/s ~ 1 m/s | | | | | | |
| Mechanical performance | Impact resistance | | Roller lever : 200 m/s2 of total travel position<br>Non-directive actuation: 300 m/s² of total travel position<br>Others: 300 m/s² free position and total travel position<br>(Contact point in free position and total travel position or total travel position | | | | | | |
| | Vibration-resistance | | Double vibration width: 1.5 mm, frequency 10~55Hz, for 2 consecutive hours<br>(Others: free position and total travel position) | | | | | | |
| Durability | Mechanical | | 10 million operations ( plunger type->5million operations, fork lever lock type->2million operations) | | | | | | |
| | Electrical | | 750,000 operations (when resistance is loaded 250VAC 10A) | | | | | | |
| | Electrical (microload) | | 1 million operations | | | | | | |
| Operating frequency | Mechanical | | 120operations/min | | | | | | |
| | Electrical | | 30operations/min | | | | | | |
| Environment conditions | Ambient temperature | | -10℃ ~ +80℃ | | | | | | |

# KL Series Limit Switch

## Structure

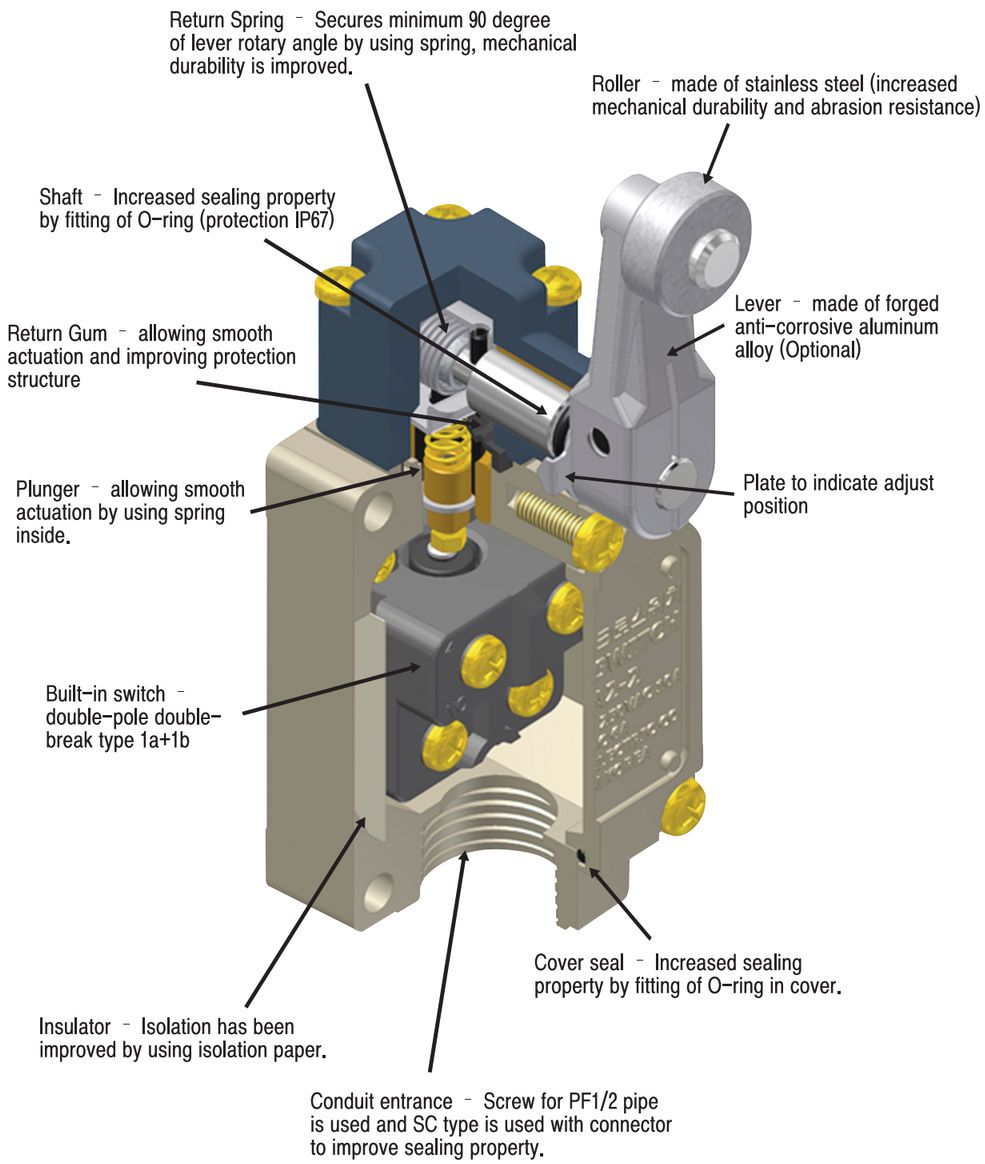


KL Series Limit Switch

## Double-pole double-break operation

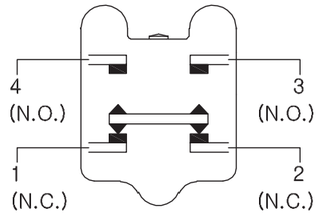


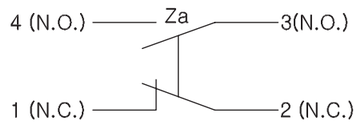


EN60947-5-1

## Codes of lever actuation range

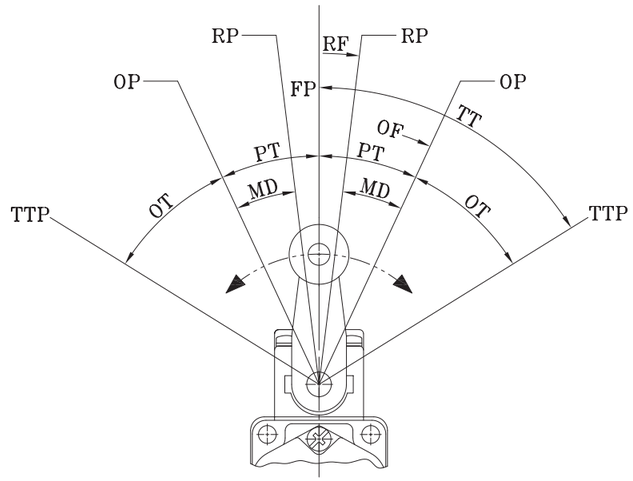


| | | |
|---|---|---|
| OF | Required force to actuate | Required force to move from free position (FP) to operating position (OP) |
| RF | Return force | Required force to return from total travel position (TTP) to return position (RP) |
| PT | Movement to actuation | Distance or angle of movement from free position (FP) to operating position (OP) |
| MD | Movement differential | Distance or angle of movement from operating position (OP) to return position (RP) |
| OT | Movement after actuation | Distance or angle of movement from operating position (OP) to total travel position (TTP) |
| OP | Operating position | Actuator position when a contact point (NO (normal open)) is actuated (On) at free position (FP) |
| FP | Free position | Actuator position when no external force is applied to actuator |
| TTP | Total travel position | Actuator position when actuator arrives at stop |
| RP | Return position | Actuator when a contact point (NO) is off at operating position (OP) |
| TT | Entire movement | Distance or angle of movement from free position (FP) to total travel position (TTP) |

# KL Series Limit Switch

## Outer dimension and actuation property

### KLCA, KLCA2–2

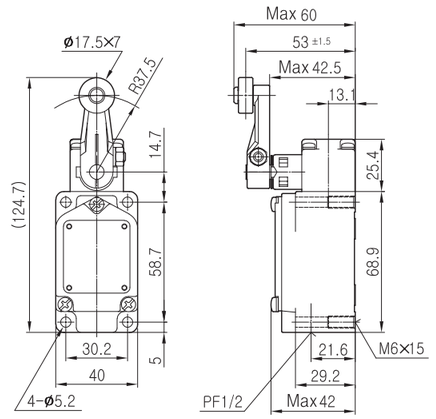


### KLCA12, KLCA12–2

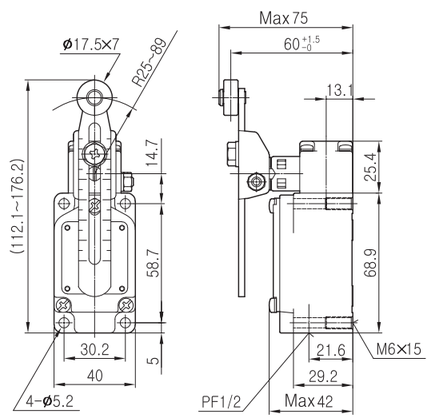


### KLCL, KLCL–2

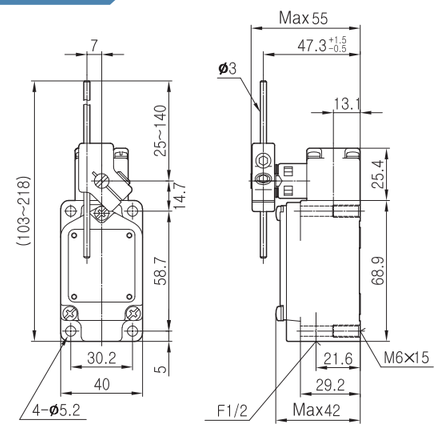


### KLCA32–41~44

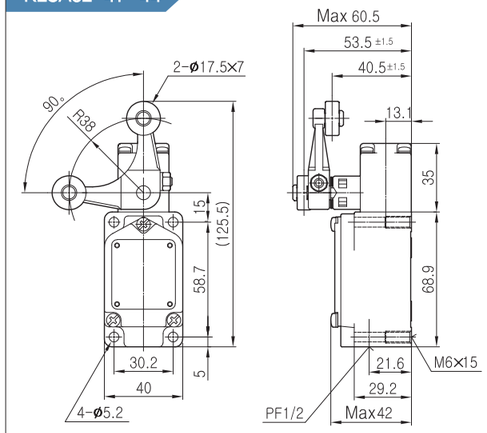


| Actuation Property | KLCA2<br>KLCA12 | KLCA2–2<br>KLCA12–2 | KLCL | KLCL–2 | KLCA<br>32–41~44 |
|---|---|---|---|---|---|
| Force required to actuate Max. OF value | 910g | 910g | 290g | 290g | 1,220g |
| Restoring force. Min. RF value | 100g | 100g | 25g | 25g | – |
| Movement to actuation Max. PT value | 20° | 30° | 20° | 30° | 50° |
| Movement after actuation Min. OT value | 55° | 60° | 55° | 60° | 30° |
| Movement Differential Max. MD value | 12° | 15° | 12° | 15° | – |



KL Series Limit Switch

## Outer dimension and actuation property

### KLD

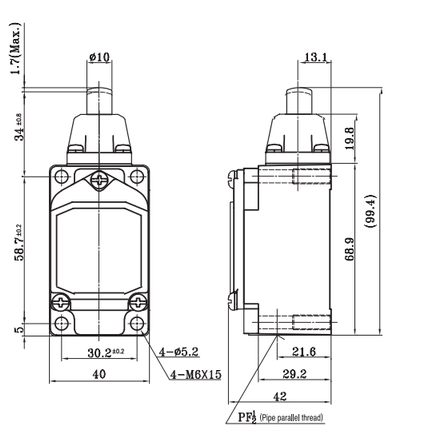


### KLD2

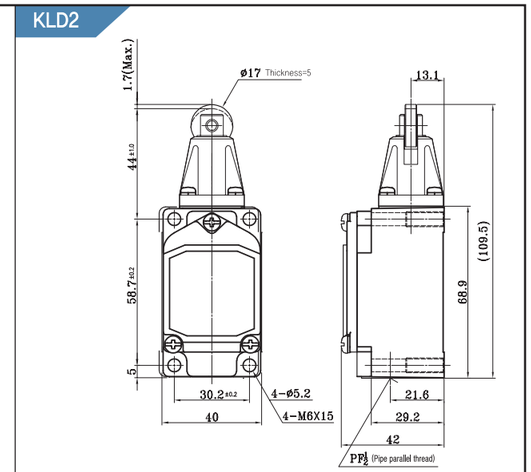


### KLD28

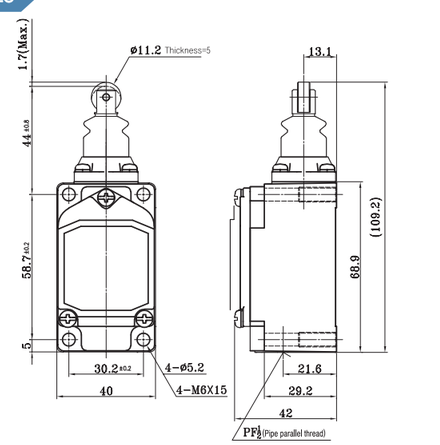


### KLD3

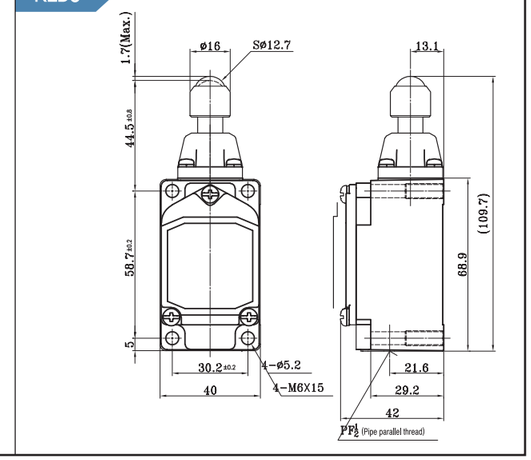


| Actuation Property | KLD | KLD2 | KLD28 | KLD3 |
|---|---|---|---|---|
| Force required to actuate Max. OF value | 2,720g | 2,850g | 1,700g | 2,720g |
| Restoring force. Min. RF value | 820g | 810g | 450g | 820g |
| Movement to actuation Max. PT value | 1.7mm | 1.7mm | 1.7mm | 1.7mm |
| Movement after actuation Min. OT value | 6.4mm | 5.6mm | 5.6mm | 4mm |
| Movement Differential Max. MD value | 1mm | 1mm | 1mm | 1mm |

## Outer dimension and actuation property

### KLSD2

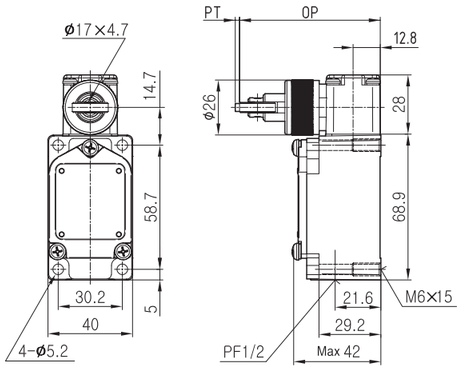


### KLNJ

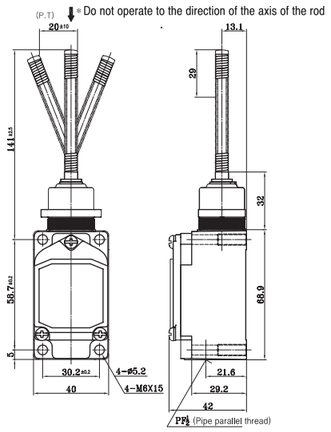


### KLNJ-A2

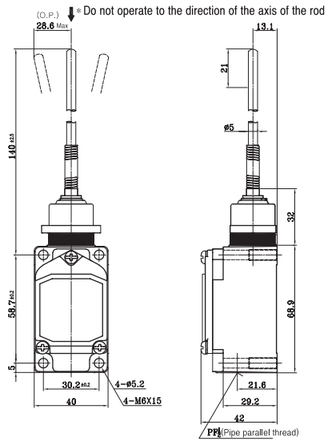


| Actuation property | KLSD2 | KLNJ | KLNJ-A2 |
|---|---|---|---|
| Force required to actuate Max. OF value | 4,087g | 150g | 150g |
| Restoring force. Min. RF value | 9.7g | – | – |
| Movement to actuation Max. PT value | 2.77mm | 20mm | 28.6mm |
| Movement after actuation Min. OT value | 5.6mm | – | – |
| Movement differential Max. MD value | 1.02mm | – | – |



KL Series Limit Switch

## Lever types and figures

### Roller lever

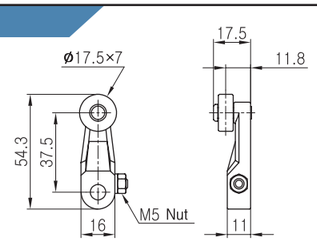


### Roller lever(custom)-S50,SA50

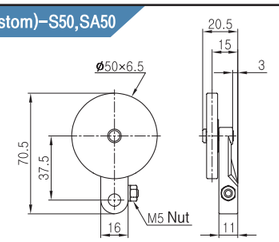


### Roller lever(custom)-SA forgeol lever

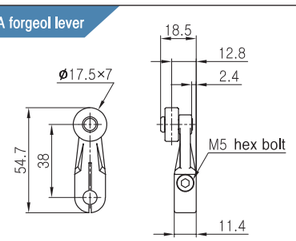


### Roller lever(custom)-SA stainless lever

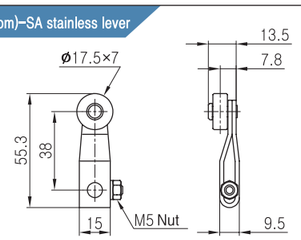


### Adjustable Roller lever

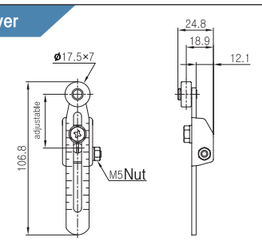


### Adjustable rod lever

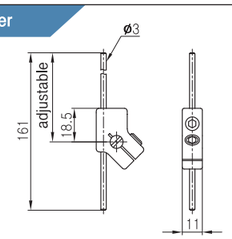


### Fork lever LOCK(CA32-41)

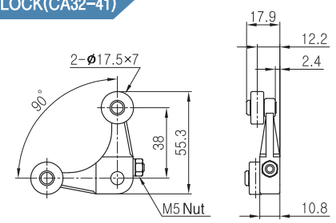


### Fork lever LOCK(CA32-42)

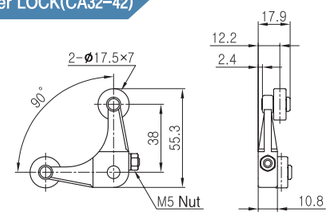


### Fork lever LOCK(CA32-43)

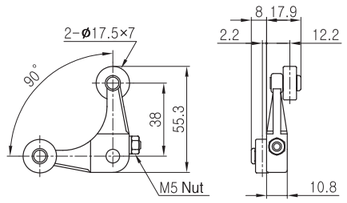


### Fork lever LOCK(CA32-44)

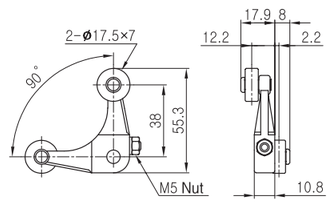

## About switch use

| Instructions | Applicable actuators | Description |
|---|---|---|
| **The position to install actuator can be changed.**<br>Actuator position can be adjusted 360° by loosening hex bolt at actuator lever.<br>In case the actuation indicating lamp is attached, please be careful to set the lever rotation because actuator lever may touch the top of lamp cover. Symmetrical lever does not touch the lamp cover. | Roller lever, adjustable roller lever, adjustable rod lever | Loosen M5 bolt and adjust its position. And then fix the bolt.<br> 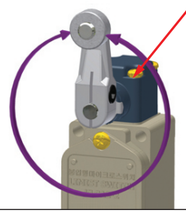 |
| **Head direction can be changed.**<br>By unscrewing 4 of corner screws of the head it can be adjusted to any of 4 directions. In this case the control plunger inside shall be adjusted as same. | Roller lever, adjustable roller lever, adjustable rod lever, Roller plunger, Side roller, Plunger | 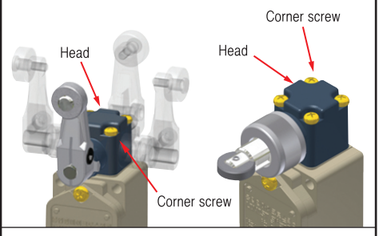 |
| **Roller can be installed inside.**<br>Roller can be installed inside by attaching roller upside down. (Please set to stop actuation within 180° horizontal range). | Roller lever, Fork lever LOCK | 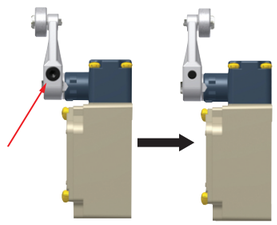 <br>Loosen hex bolt or nut. |
| **Lever rod length can be adjusted.**<br>Lever or rod length can be adjusted by loosening hex bolt. | adjustable roller lever, adjustable rod lever | 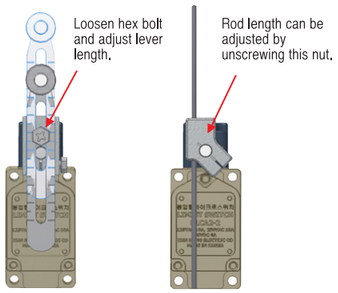 |





KL Series Limit Switch

## Indicator Type

- It is convenient to check operation state and circuit and to find actuation by neon lamp (for AC power) or LED (for DC power).
- Lamp terminal (indicating lamp cover) connection is made through contact spring (coil spring) by using terminal screw of built-in switch. No wiring is required for lamp terminal.
- Indicating lamp cover is made of transparent resin together with aluminum die-casting so as to assure high sealing property, which allows normal operation even in the environment with cutting oil. Also, it enables monitoring the operating state. Further, it is easy to switch either light ON when Operating or light ON when not operating.
- This is most suitable to verify passing of goods in conveyor line or verifying operation in an area where verification is not easy.
- It's not necessary to change polarity for LED type because LED type has rectifying element internally.

## Type/Rating

| | Rated voltage | Leakage current | Switch to install lamp | Lamp cover Type |
|---|---|---|---|---|
| Neon lamp | 125VAC | 0.7mA Max | KL□-LE | KL-LE |
| LED | AC/DC 12~25V | 4mA Max | KL□-LE | KL-LD |

## Operation

| | | |
|---|---|---|
| Light ON when operating<br>KL□-LE<br>KL□-LD | 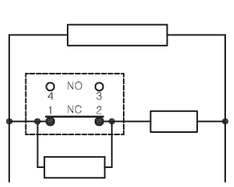 | <br>LED upward direction |
| Light ON when not operating<br>KL□-LE<br>KL□-LD | 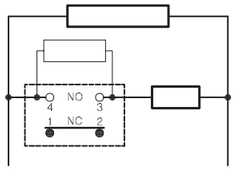 | <br>LED downward direction |

- Factory setting is at "light ON when operating" mode.
- For "light ON when not operating" mode, please switch LED to downward direction as shown in the figure.

KL Series Limit Switch

## Internal circuit diagram

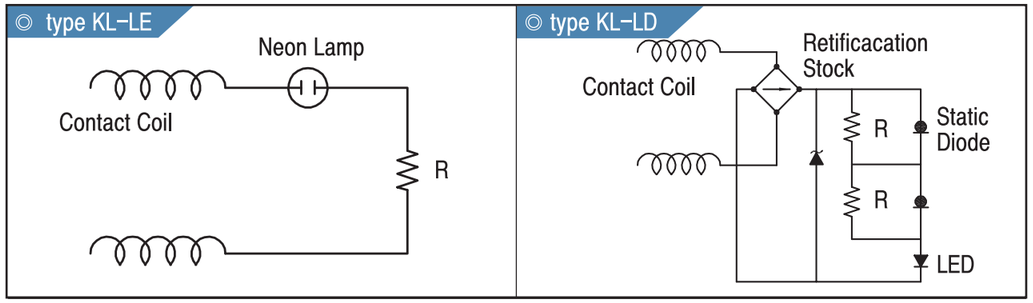


## Notes

- Excessive force or impact to limit switch roller lever to activate switch may cause unstable actuation of actuator, shortening electrical and mechanical durability.
- Right and wrong examples of installation.

| Wrong | Right | Wrong | Right | Wrong | Right | Wrong | Right |
|---|---|---|---|---|---|---|---|
| 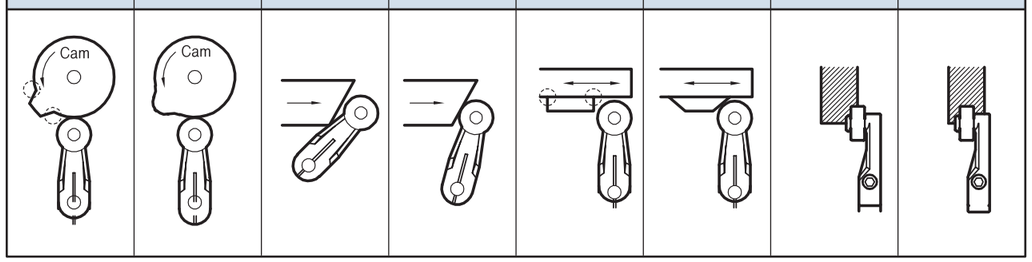 | | | | | | | |



## Recommended installation

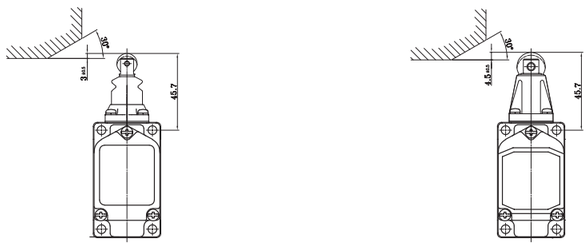

For side actuation of the product, recommended dimension is indicated as shown in the diagram.

## Connector

KL series main body can be used as connector type by assembling components as specified below.

| Rated Current | 10A | 6A |
|---|---|---|
| Rated voltage | AC 125V | AC 250V |
| Contact resistance | 40mΩ or below(DC20mV or below, at 100mA or below) | |
| Insulation resistance | 100MΩ or above( at DC500V) | |
| Dielectric strength | AC 1500V 1min.(Between live parts / Between dead parts) | |
| Protection | IP67(IEC529) | |
| Tightening torque | 0.8 NM | |
| Tensile strength | 98N | |
| Operating temperature | −25℃~+70℃ | |
| Contact pin material | Brass (gold plating) | |
| Fixture material | Brass (nickel plating) | |
| Pin block material | PBT Glass(UL94−V0) | |
| O−ring material | NBR | |
| Housing material | Polyester elastomer | |
| Cord property (cable) | Increased resistance to oil / increased flexibility (300V 80℃) | |

## Connector combinations

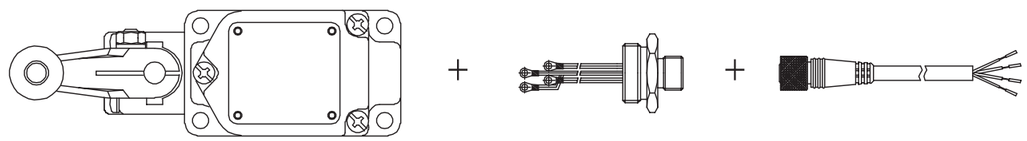

Limit Switch + Seal connector + Relay wiring

## Seal connector

| Type | Product name | Power | Number of core wires | Outer figure |
|---|---|---|---|---|
| KL□□−SC−D6SW | Seal connector type | Direct current (DC) | 4 wires | 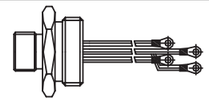 |
| KL□□−SC−A6SW | | Alternating current (AC) | 4 wires | |

## Connector structure

### Connector wiring method

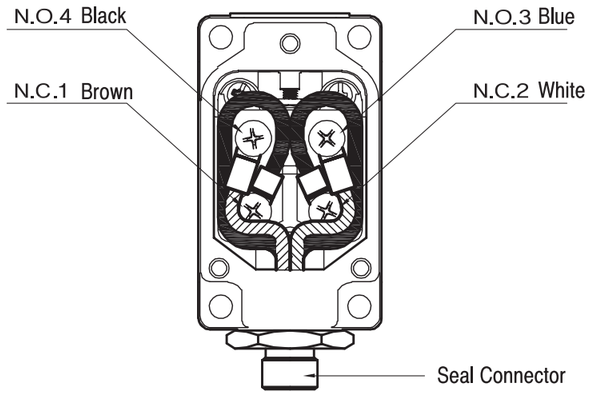


### Outer dimension of connector

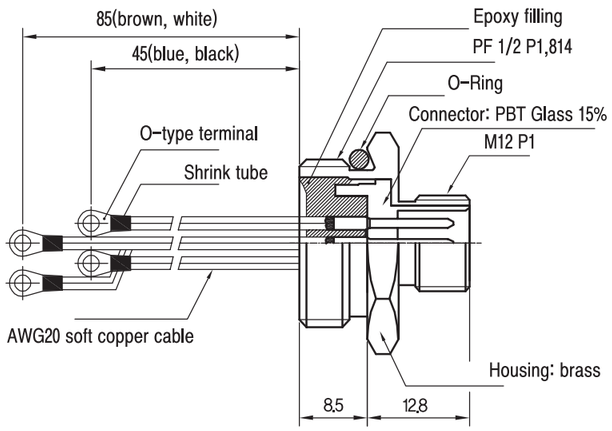


### SC-D6SW

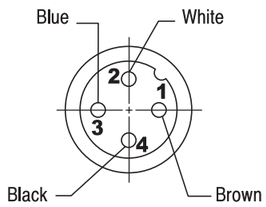


### SC-A6SW

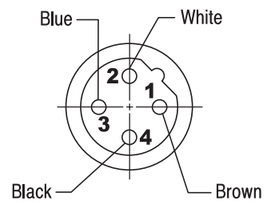


## Relay wiring

| Type No. | Product name | Core wire | Power | Cord length | Wire color | Wiring material |
|---|---|---|---|---|---|---|
| D6SW-1 | IWP wiring | 4 wires | Direct current (DC) | 2m | 1(brown), 2(white), 3(blue), 4(black) | Soft PVC |
| A6SW-1 | IWP wiring | 4 wires | Alternating current (AC) | 2m | 1(brown), 2(white), 3(blue), 4(black) | Soft PVC |

※ Any length of cord is available upon order

## Outer diagram of relay wiring

| Type No. | Connector shape | Outer diagram |
|---|---|---|
| D6SW-1 | | 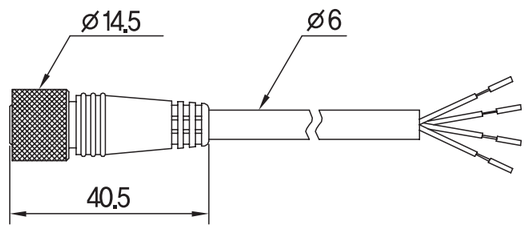 |
| A6SW-1 | | 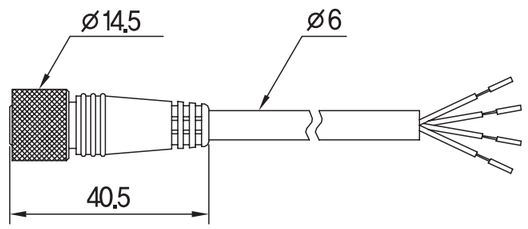 |